Front View

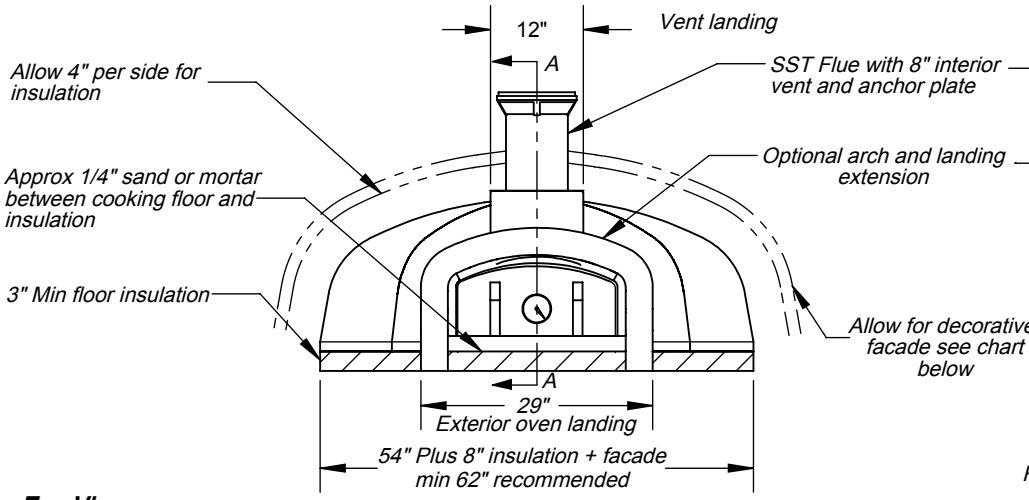

Side Elevation

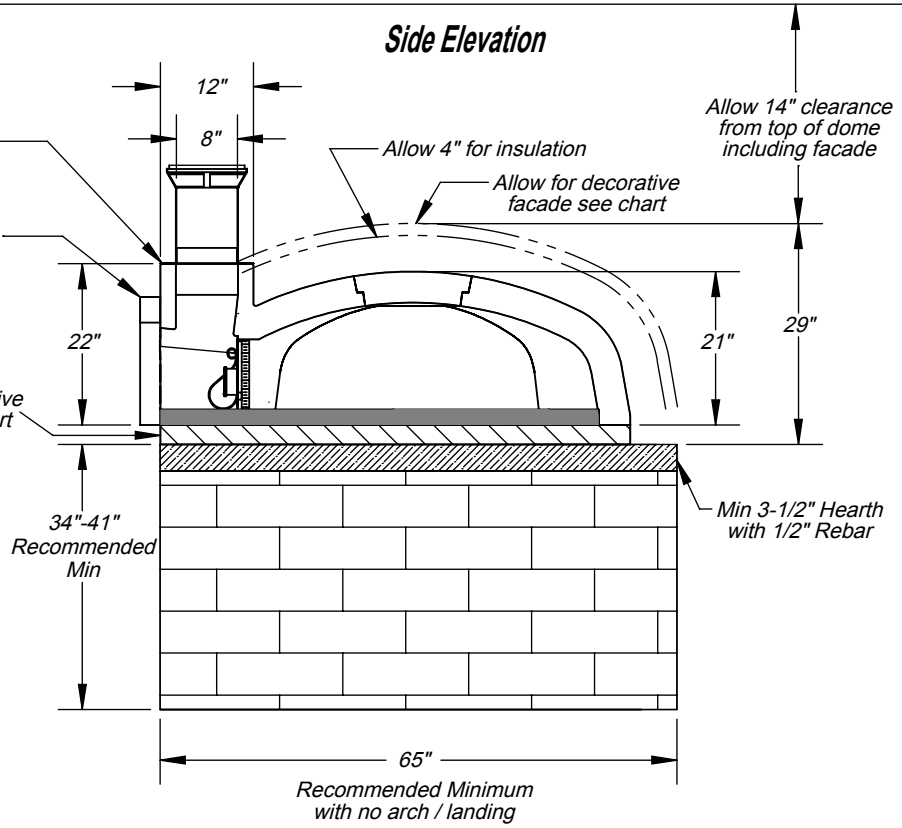

Section A-A

Shown with non combustible Concrete Hearth

Top View

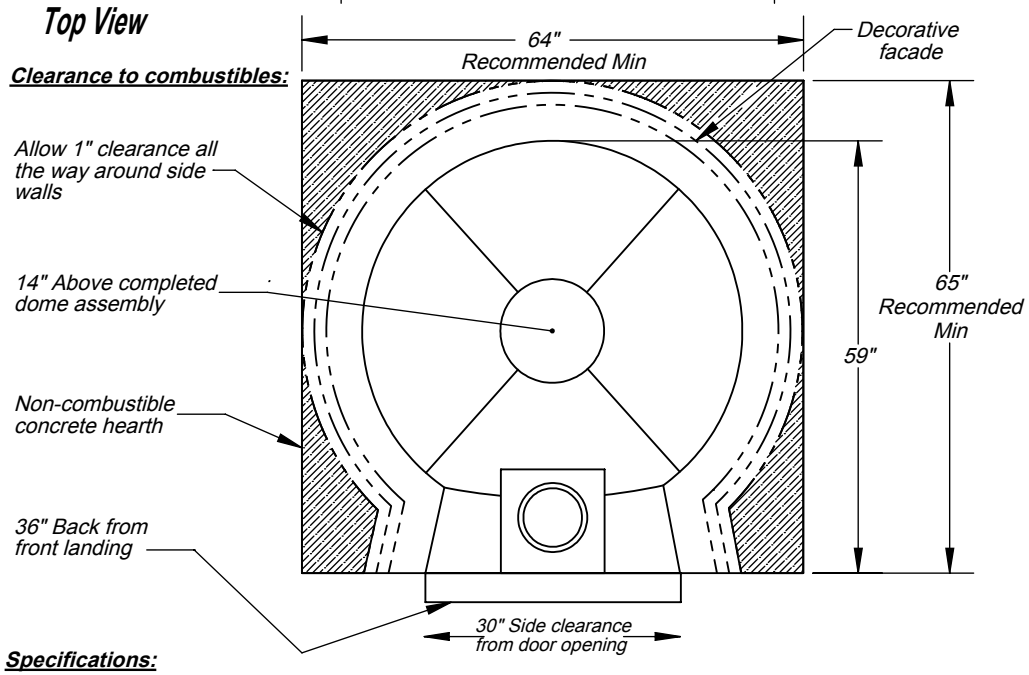

Clearance to combustibles:

Specifications:

Wood fuel only;

Single wall 8" SST flue standard;

8" UL103 HT for indoor install;

Crate ships 49"W x 58"L x 50"H;

Approx weight 2100 lbs;

Lift gate optional.

Decorative Facade Allowances	Depth	Width
Brick Arch	Usually 5"	N/A
Brick Landing	Usually 8"	Prefrence
Stucco	Approx 1"	Approx 2"
Tile	Approx 1"	Approx 2"
Stone/Brick Veneer	Approx 1"	Approx 2"
Brick or Masonary non veneer	Check Material Spec	
UL-2162, UL-737, NSF-4, CAN/CGA-1.8, ANSI-Z83.11 Listed		

MADE IN THE USA

FORNO BRAVO
THE WORLD'S FINEST PIZZA OVENS

Premio2G 120
Architect Drawings
Revision 1/26/15